SorinoMold

Professional Supplier for PET Blowing Mould and Parts

Blowing mold for Krones blower

600ml water bottle mold , Compact structure，
125mm outside diameter, quick change mold.

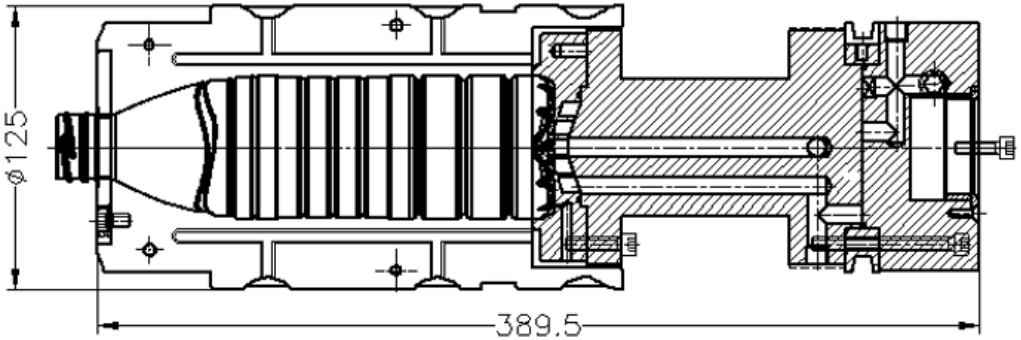

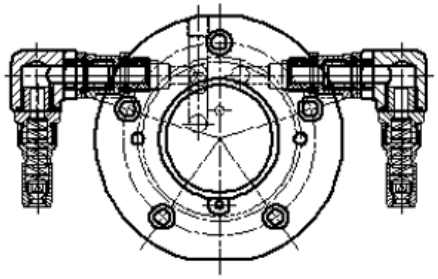

Quick change Blowing mold for Krones blower

The mold shell for Krones blower

The blowing mold is settled on the mold shell

1000ml hot filled bottle mold .160mm outside diameter, made by stainless steel

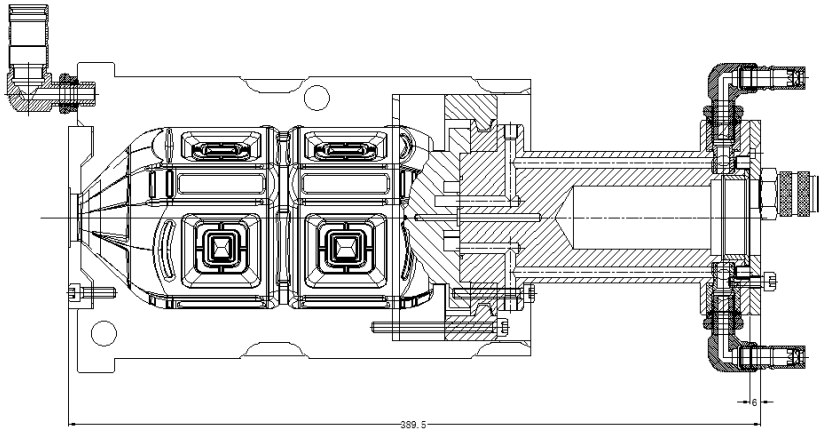

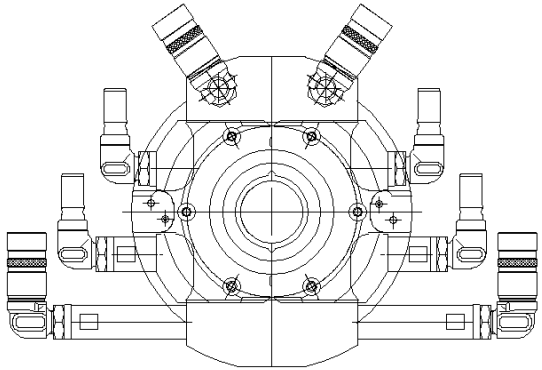

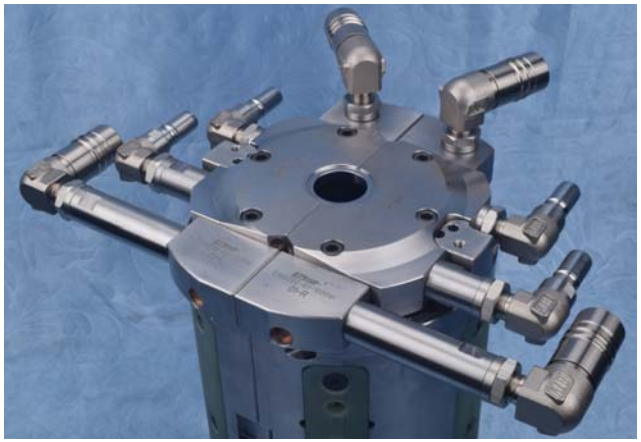

Blowing mold for Sidel blower

500ml hot filled bottle mold for Sidel blower.150mm outside diameter, made by stainless steel

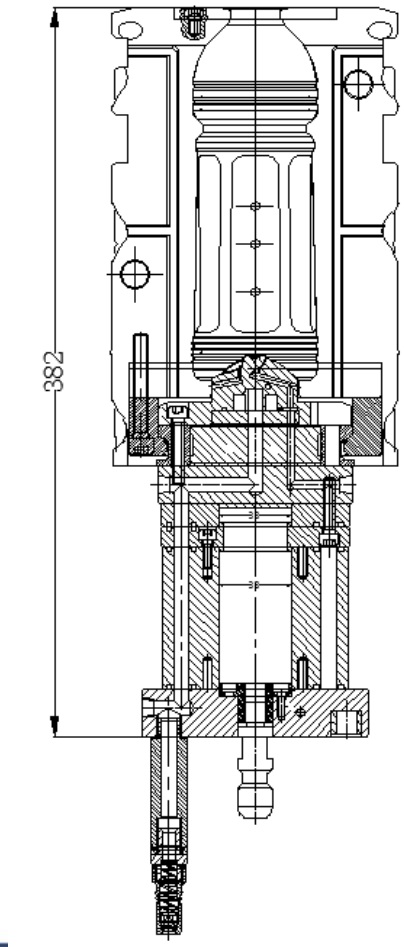

560ml CSD bottle mold for Sidel blower.150mm outside diameter, made by Alcoa A6061

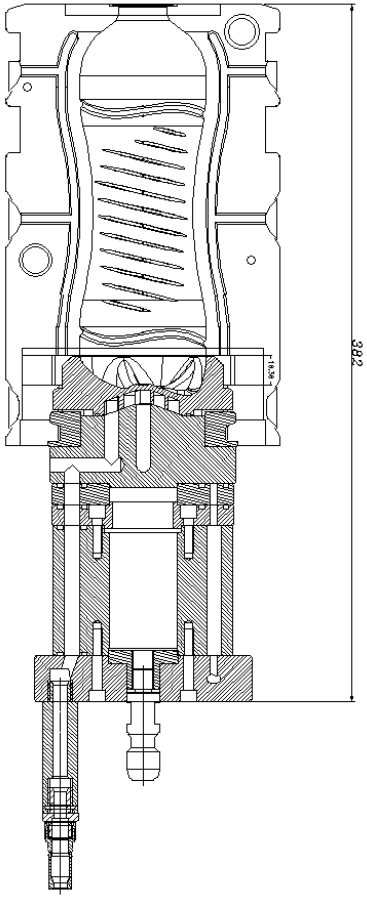

Blowing mold for KHS blower

500ml aseptic bottle mold for KHS blower.
150mm outside diameter, made by Alcoa A6061

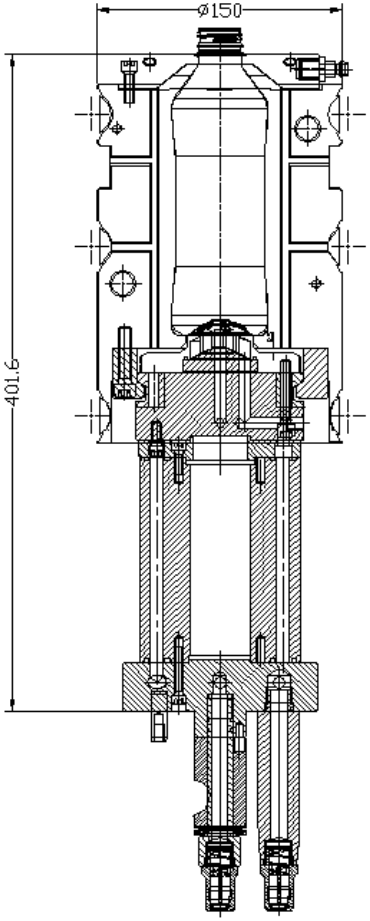

Blowing mold for Sacmi blower

1500ml water bottle mold for Sacmi blower.
150mm outside diameter, made by Alcoa A6061

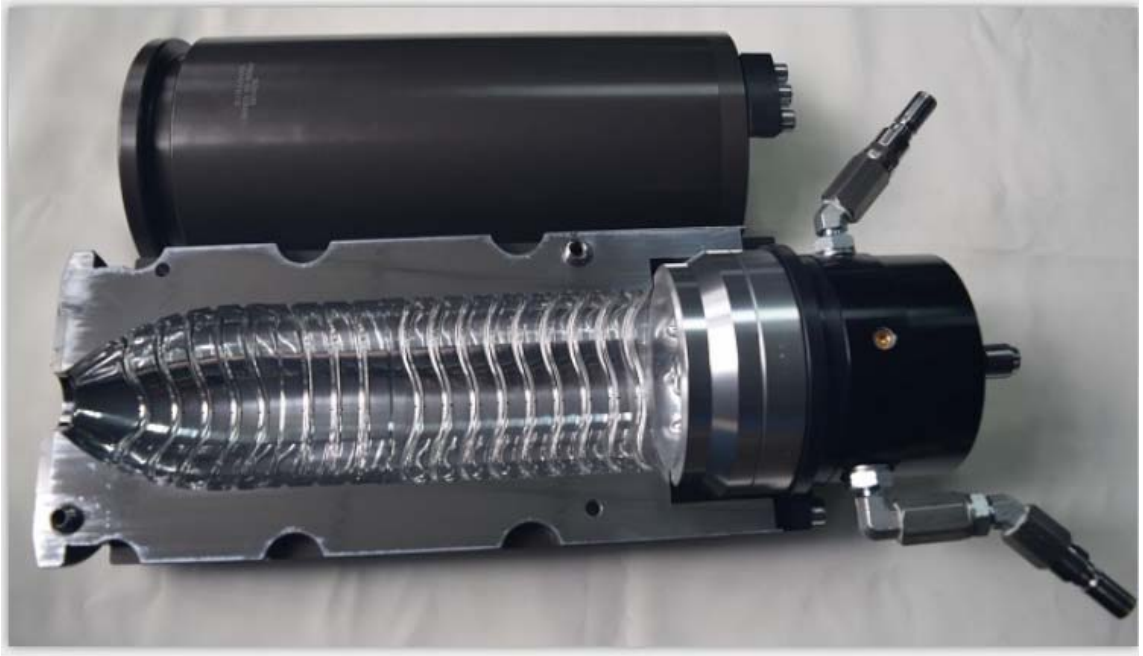

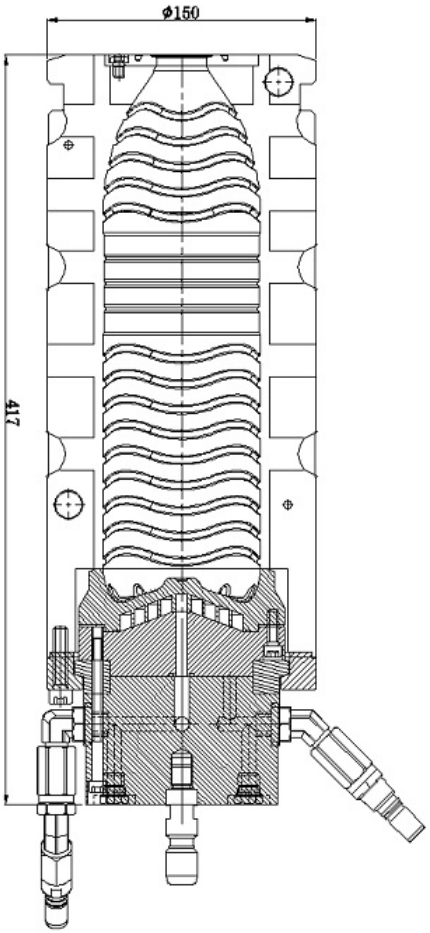

Blowing mold for Sipa blower

480ml fruit drinks bottle mold for Sipa blower.
125mm outside diameter, made by Alcoa A6061

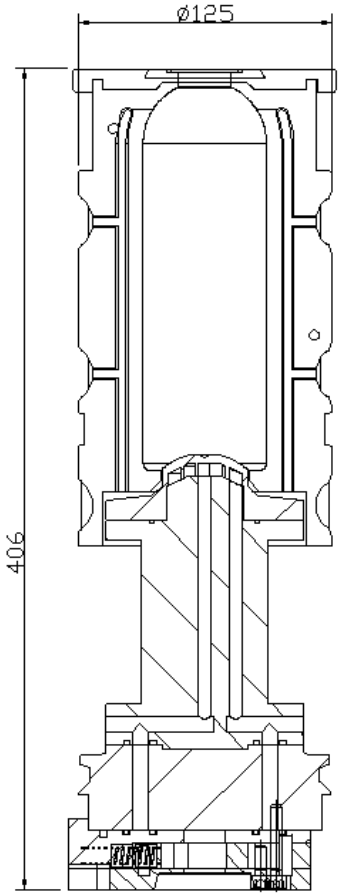

Accessories for blow molds

Accessories for blowers

Spindle nose and ejector , gripper etc.

Quick change one way couplings, hydraulic or air hose

Stretch rod and clamping shaft

Accessories for filling machines

Precise mechanic parts (blower and filler and labeler and shrink labelling machine)

Shock Absorber

Quick Coupling

Gripper

Spindle head

Locking pin

Stopper

Choke of capper

The end Thanks!

We can do more than you see.

Our philosophy is: Good products and continuous improvement.

Because we believe that technology is endless.